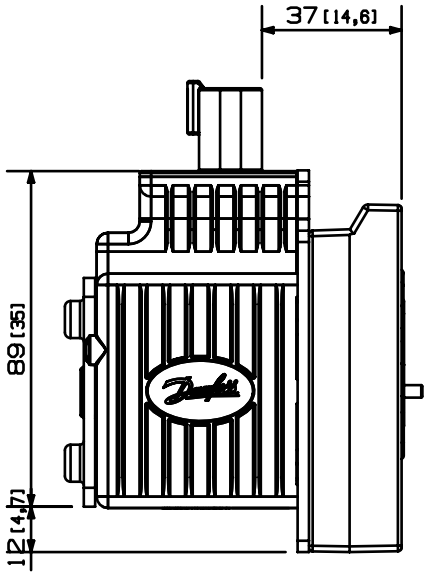

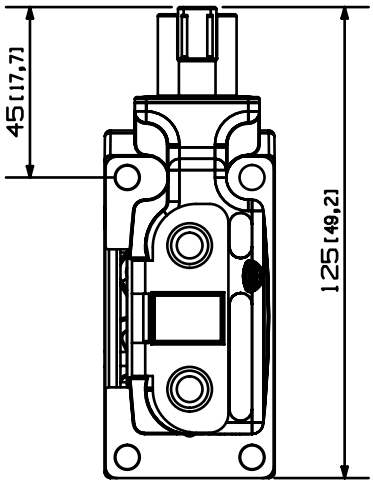

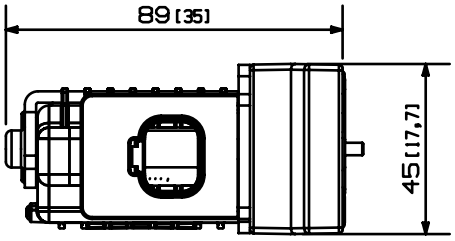

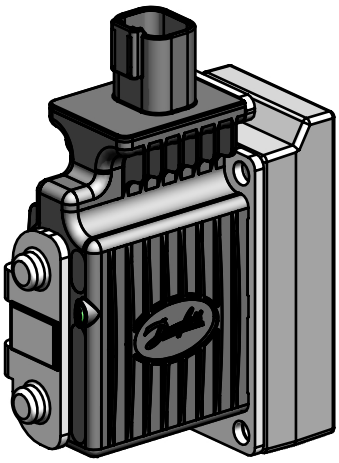

FOR INTERNAL USE ONLY					DATE	NAME	MATERIAL/SPECIFICATION
				DRAFTER			
				DESIGNER			RAW PART NO
				ENGINEER			
REV	AUTH	DATE	NAME	PRODTECH			
AUTHORIZATION DOC:				LC STATE			DRAWING INTERPRETATION PER GS-0074

THE REPRODUCTION, DISTRIBUTION AND UTILIZATION OF THIS DOCUMENT AS WELL AS THE COMMUNICATION OF ITS CONTENTS TO OTHERS WITHOUT EXPLICIT AUTHORIZATION IS PROHIBITED. OFFENDERS WILL BE HELD LIABLE FOR THE PAYMENT OF DAMAGES. ALL RIGHTS RESERVED IN THE EVENT OF THE GRANT OF A PATENT, UTILITY MODEL OR DESIGN. (PER ISO 16016)

TITLE

1×4DEU_PVEO_PVEO-R

SCALE 1:2

SHEET 1 OF 1

NO

REV –